# T Wheelchair Tray | Order Form CAN 4.0

Synetik
ErgoCare

| | | | |
|---|---|---|---|
| Company : | | Address : | |
| Quote : | | City : | |
| PO Number : | | State : | |
| Marked for : | | Zip : | |
| Ship to : | | Phone : | |

## STANDARD (Without Edge)

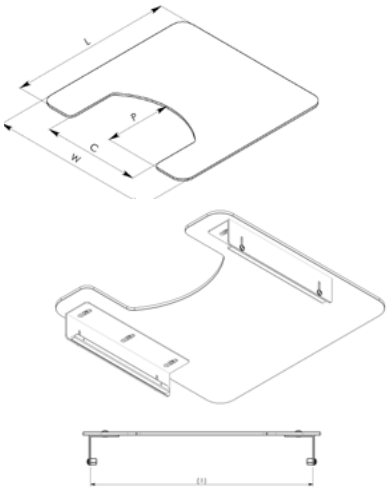

**1-Dimension**

| | Width (W) | Length (L) | Existing arm rest outside width (I) | Opening (C x P) | Code | Price |
|---|---|---|---|---|---|---|
| ☐ | 24” | 24” | min 22 - Max 24 | 15” x 9” | 111-00001-24 | **240 $** |
| ☐ | 22” | 22” | min 20 - max 22 | 13” x 9” | 111-00001-22 | **207 $** |
| ☐ | 20” | 20” | min 18 - max 20 | 11” x 7” | 111-00001-20 | **183 $** |

**2-Tray support**

| | Aluminium | Price |
|---|---|---|
| ☐ | 101-00009 | **90 $** |
| ☐ | 101-00013 | **134 $** |

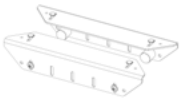

101-00009

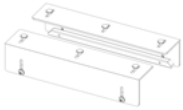

101-00013

**3-Options**

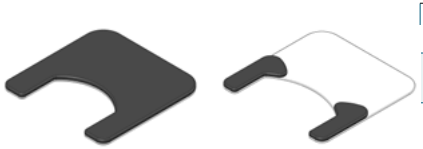

| | Table cushion | Price |
|---|---|---|
| ☐ | Complete \| 120-00002-20F \| 120-00002-22F \| 120-00002-24F | **235 $** |
| ☐ | Elbow only \| 120-00002-20E \| 120-00002-22E \| 120-00002-24E | **230 $** |
| ☐ | None | **0 $** |

## STANDARD (With Edge)

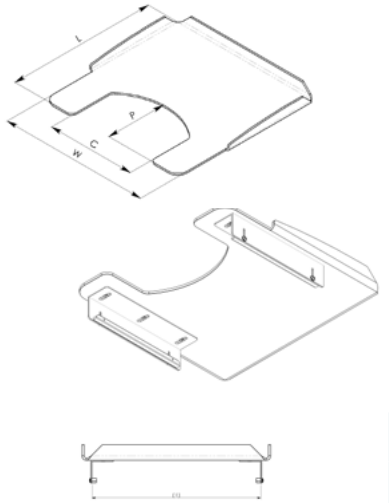

**1-Dimension**

| | Width (W) | Length (L) | Existing arm rest outside width (I) | Opening (C x P) | Code | Price |
|---|---|---|---|---|---|---|
| ☐ | 24” | 24” | min 22 max 24 | 15” x 9” | 111-00002-24 | **317 $** |
| ☐ | 22” | 22” | min 20 max 22 | 13” x 9” | 111-00002-22 | **274 $** |
| ☐ | 20” | 20” | min 18 max 20 | 11” x 7” | 111-00002-20 | **227 $** |

**2-Tray support**

| | Aluminium | Price |
|---|---|---|
| ☐ | 101-00009 | **90 $** |
| ☐ | 101-00013 | **134 $** |

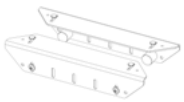

101-00009

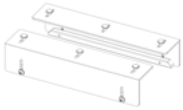

101-00013

**3-Options**

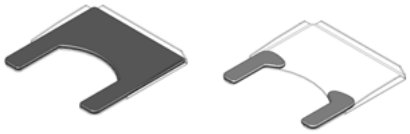

| | Table cushion | Price |
|---|---|---|
| ☐ | Complete \| 120-00002-20F \| 120-00002-22F \| 120-00002-24F | **235 $** |
| ☐ | Elbow only \| 120-00002-20E \| 120-00002-22E \| 120-00002-24E | **230 $** |
| ☐ | None | **0 $** |

* ONCE THE IDEAL POSITION IS DETERMINED THE TRAY WILL NEED TO BE DRILLED USING 1/4” DRILL BIT BEFORE ASSEMBLY